REVISIONS					
REV	DESCRIPTION	DR	CH	DATE	APPROVAL
Y8	PER EN 60-53227 XX-Y8				
Y8	REDRAWN WITHOUT ANY CHANGE				

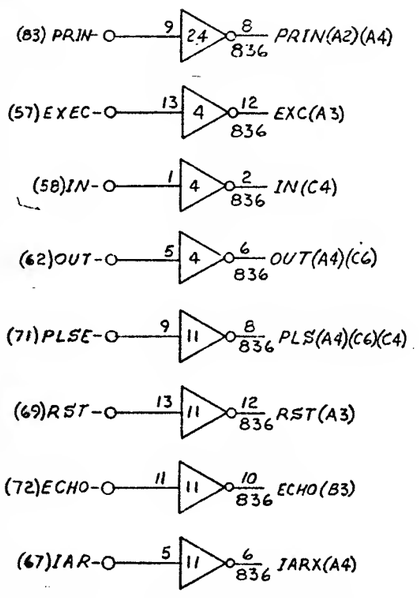

NOTES: UNLESS OTHERWISE SPECIFIED

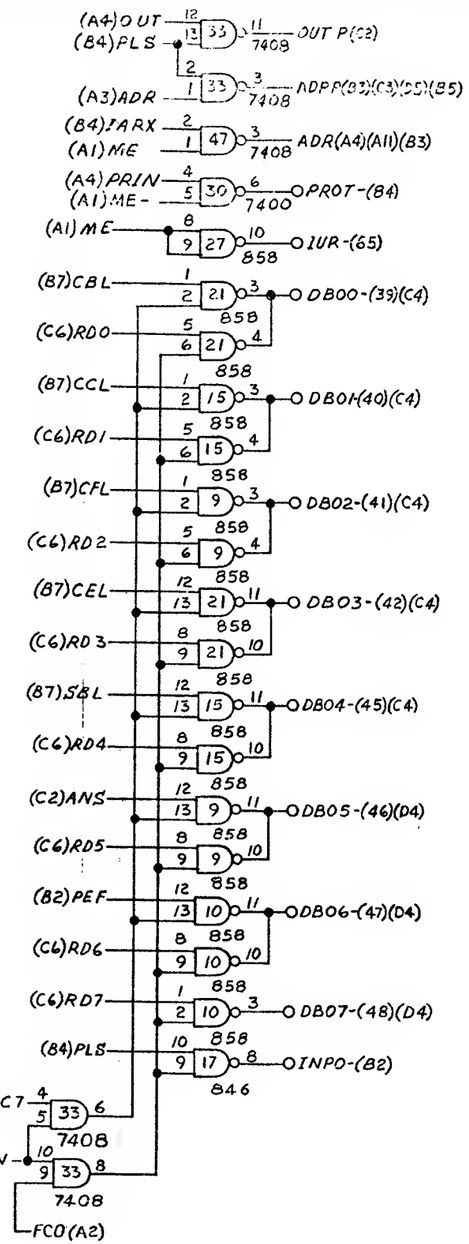

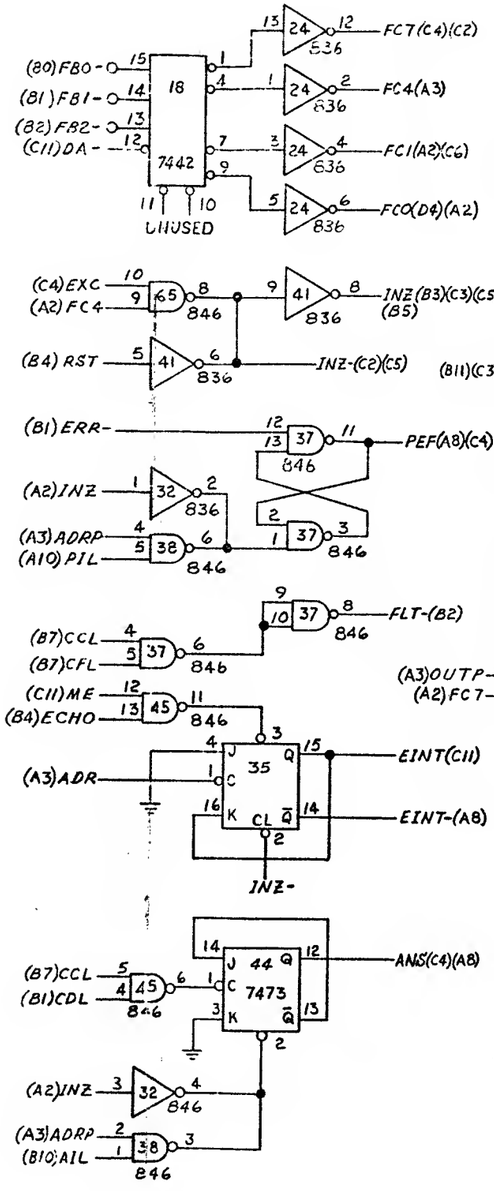

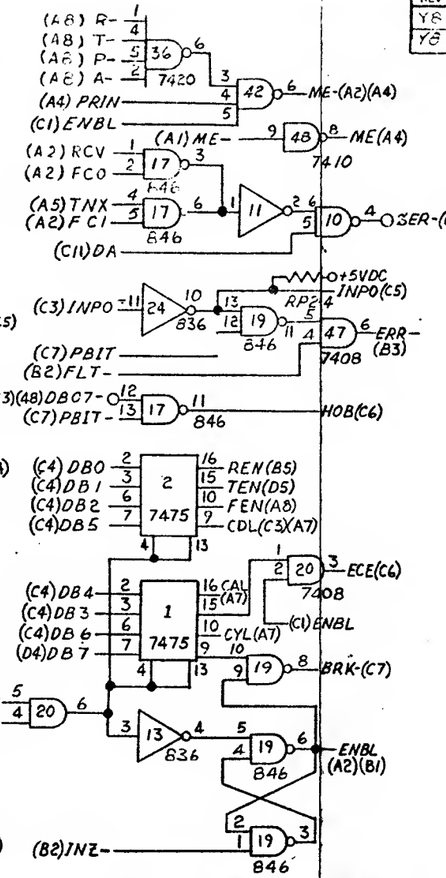

SECOND DIGIT TABULATION					
DIGIT NO.	BAUD RATE	VALUE C1	VALUE C3	VALUE R1	VALUE R2
-01	110	1.5 mf	.68 mf	14.3K	14.3K
-02	150	1.5 mf	.68 mf	14.3K	14.3K
-03	300	1.5 mf	.65 mf	5K	5K
-04	600	.33 mf	.15 mf	14.3K	14.3K
-05	1200	1.5 mf	.082 mf	5K	5K
-06	1800	1.5 mf	.062 mf	5K	5K
-07	2400	1.5 mf	.082 mf	5K	5K

.15 μF.

PROPRIETARY RIGHTS NOTICE

THIS DOCUMENT AND INFORMATION THAT IT CONTAINS ARE THE PROPERTY OF COMPUTER AUTOMATION, INC. RIGHTS TO DUPLICATE OR OTHERWISE COPY THIS DOCUMENT AND RIGHTS TO DISCLOSE THE DOCUMENT AND SUCH INFORMATION TO OTHERS AND THE RIGHT TO USE THE INFORMATION CONTAINED THEREIN, MAY BE ACQUIRED ONLY BY WRITTEN PERMISSION SIGNED BY A DULY AUTHORIZED OFFICER OF COMPUTER AUTOMATION, INC.

2. REF. DESIGNATORS NOT USED C15, C16.
1. ALL RESISTORS ARE 1/4 W, 5%

NOTES UNLESS SPECIFIED
1. TOLERANCES .XX ±.03 ANGULAR .XXX ±.010 ±½°
2. BREAK ALL SHARP EDGES .010 APPROX.
3. ALL DIM. IN INCHES

DASH NO. | NEXT ASSEMBLYS

DR: ECHLICE
CH: T. DEL COLET
DSG:
ENGR:

COMPUTER AUTOMATION INC.
18651 VON KARMAN, IRVINE, CAL 92664

TITLE: ALPHA ASYNCHRONOUS DATA SET CONTROLLER

SIZE: D | DWG. NO.: 00-52227-XX | REV: Y8

DO NOT SCALE DRAWING | SCALE: | SHT. 1 OF 3

00-52227-XX Y8

4 3 2 1

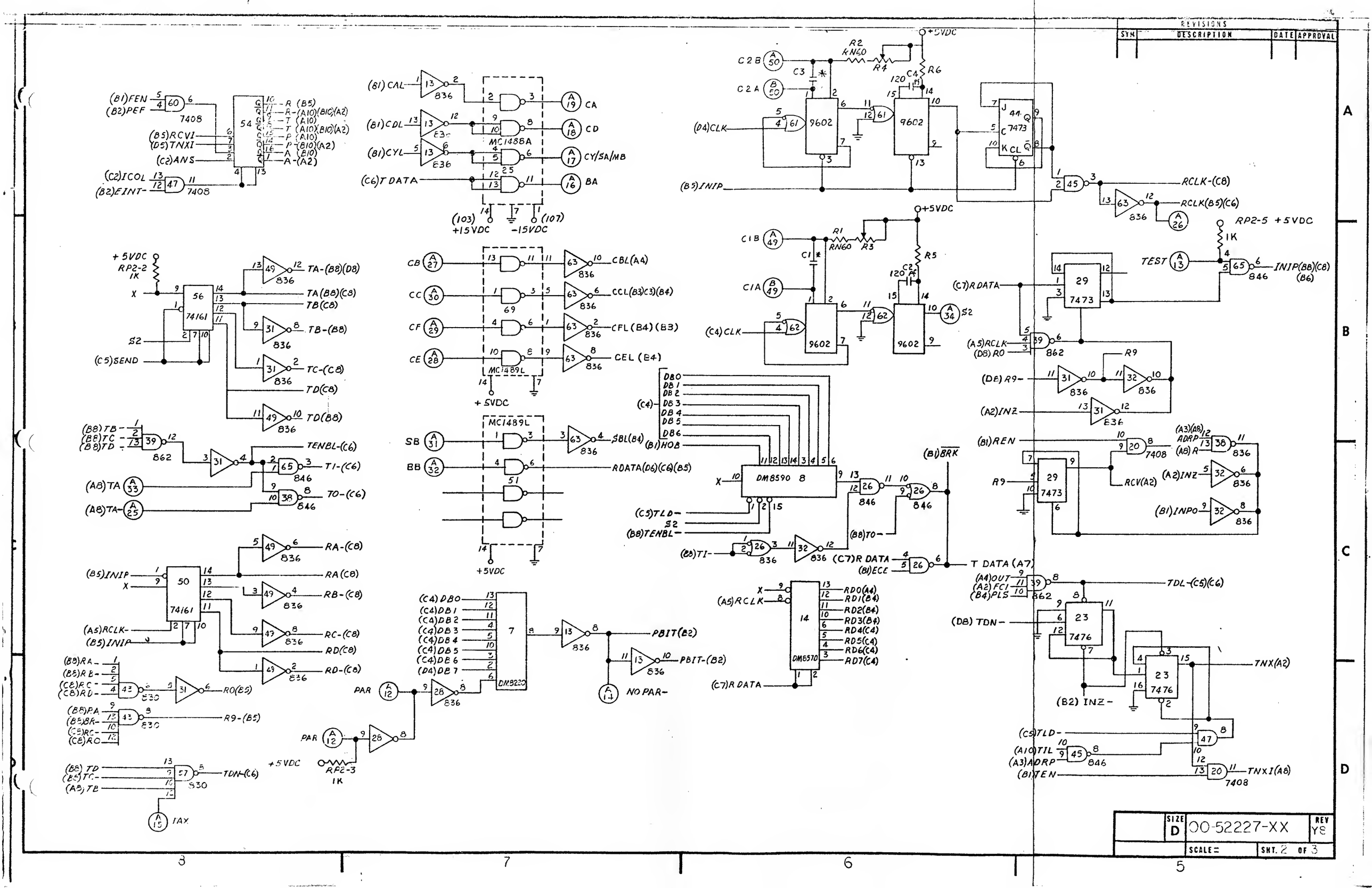

REVISIONS
SYM
DESCRIPTION
DATE
APPROVAL
(B1)FEN
(B2)PEF
(B5)RCVI
(D5)TNXI
(C2)ANS
(C2)ICOL
(B2)EINT-
7408
54
R (B5)
R-(A10)(B10)(A2)
T (A10)
T (A10)(B10)(A2)
P (A10)
P-(B10)(A2)
A (B10)
A-(A2)
(B1)CAL
(B1)CDL
(B1)CYL
(C6)T DATA
MC1488A
CA
CD
CY/SA/MB
BA
(103) +15VDC
(107) -15VDC
+5VDC
RP2-2 1K
X
S2
(C5)SEND
74161
TA-(B8)(D8)
TA(B8)(C8)
TB(C8)
TB-(B8)
TC-(C8)
TD(C8)
TD(B8)
(B8)TB
(B8)TC
(B8)TD
862
TENBL-(C6)
T1-(C6)
TO-(C6)
(A8)TA
(A8)TA-
(B5)INIP
RA-(C8)
RA(C8)
RB-(C8)
RC-(C8)
RD(C8)
RD-(C8)
(A5)RCLK-
(B5)INIP
(B8)RA
(B8)RB
(C8)RC
(C8)RD
RO(B5)
(B8)RA
(B8)BR
(C8)RC
(C8)RO
R9-(B5)
(B8) TD
(B5)TC
(A8) TB
TDN-(C6)
TAX
CB
CC
CF
CE
CBL(A4)
CCL(B3)C3)(B4)
CFL(B4)(B3)
CEL (B4)
MC1489L
SB
BB
SBL(B4)
RDATA(D6)(C6)(B5)
(C4) DB0
(C4) DB1
(C4) DB2
(C4) DB3
(C4) DB4
(C4) DB5
(C4) DB6
(D4) DB7
DM8220
PAR
PBIT(B2)
PBIT-(B2)
NO PAR-
RP2-3 1K
C2B
C2A
(D4)CLK
(B5)INIP
9602
R2 RN60
R4
R6
C3
C4
120
7473
RCLK-(C8)
RCLK(B5)(C6)
C1B
C1A
(C4)CLK
R1 RN60
R3
R5
C1
C2
S2
RP2-5 +5VDC
1K
TEST
INIP(B8)(C8)(B6)
(C7)R DATA
(A5)RCLK
(D8) RO
(D8) R9-
(A2)INZ
R9
(B1)REN
(A3)(A8)ADRP
(A8) R
RCV(A2)
(B1)INPO
(B1)BRK
(B1)HOB
DM8590
(C5)TLD-
(B8)TENBL-
(B8)TO-
(B8)TI-
(C7)R DATA
(B1)ECE
T DATA (A7)
(A5)RCLK
DM8570
RD0(A4)
RD1(B4)
RD2(B4)
RD3(B4)
RD4(C4)
RD5(C4)
RD6(C4)
RD7(C4)
(A4)OUT
(A2)FC1
(B4)PLS
TDL-(C5)(C6)
(D8) TDN-
7476
TNX(A2)
(B2) INZ-
(C5)TLD-
(A10)TIL
(A3)ADRP
(B1)TEN
TNXI(A8)
A
B
C
D
8
7
6
5
SIZE D
00-52227-XX
REV Y8
SCALE =
SHT. 2 OF 3

REVISIONS.			
SYM	DESCRIPTION	DATE	APPROVAL

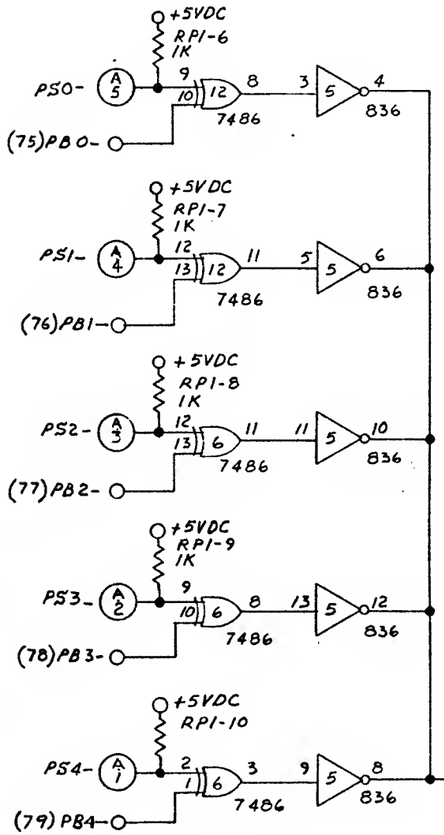

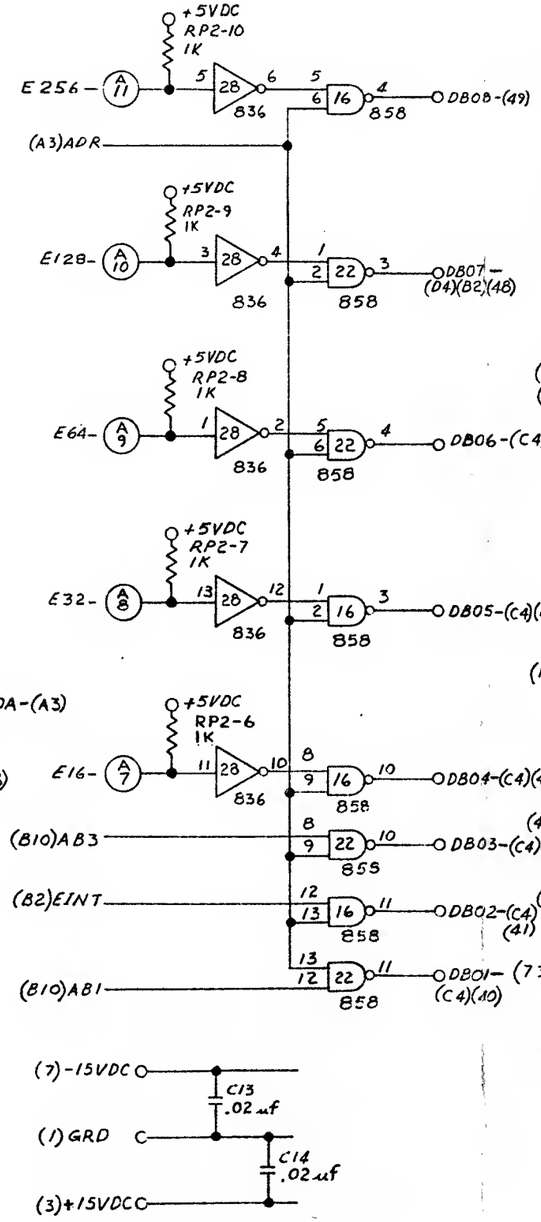

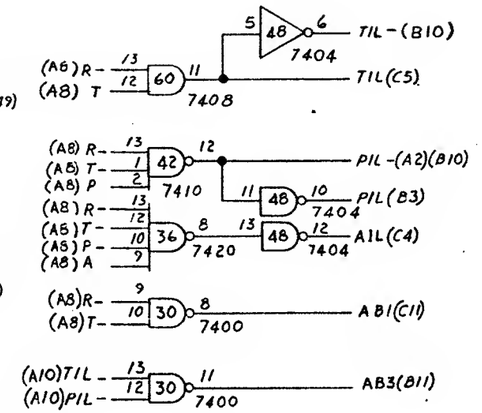

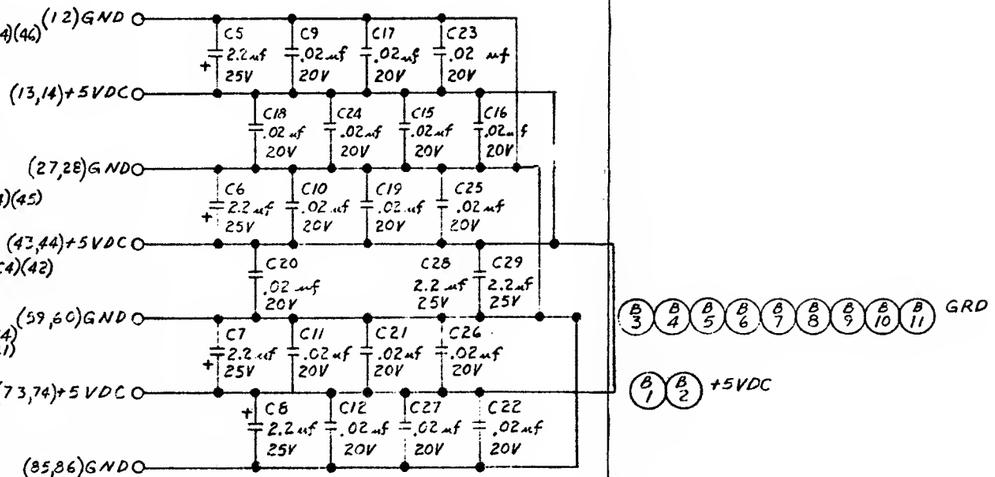

	SIZE		REV
	D	00-52227-XX	Y8
	SCALE=	SHT. 3 OF 3	

12 11 10 9

A B C D